ITEM NO.	PartNo	DESCRIPTION	QTY.
1	clamp-rod-cover	Battery Module Clamp Threaded Rod Cover Plate	4
2	compression-rod	Battery Module Clamp Compression Rod	2
3	3/8in-16 Thin Nut	316 Stainless Steel 0.375in - 16 Thread, Thin Nut	4
4	clamp-side-plate	Battery Module Clamp Side Plate	1
5	clamp-side-plate	Battery Module Clamp Side Plate	1
6	clamp-end-plate	Battery Module Clamp End Plate	1
7	Btn. Screw 0.75inx0.25in-20	Button Head Screw 3/4in x 1/4-20 Thread	4

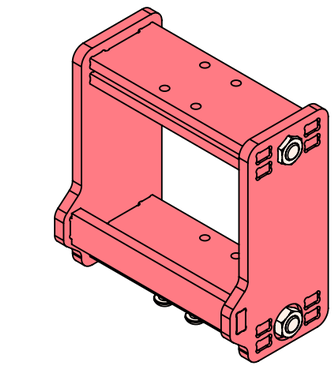

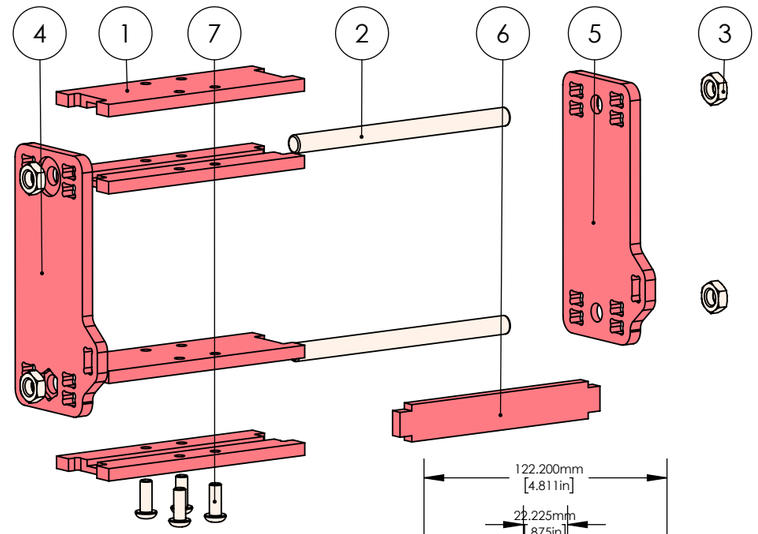

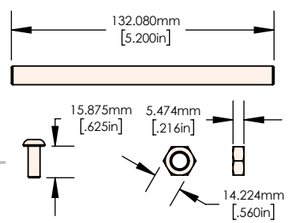

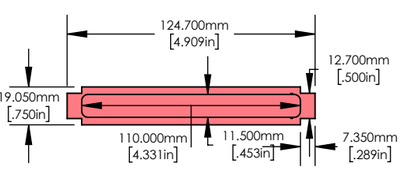

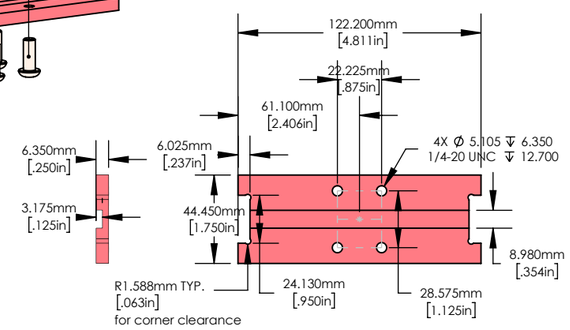

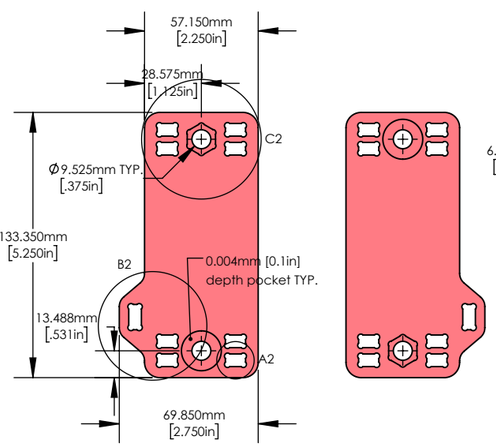

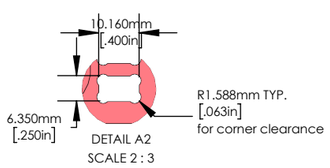

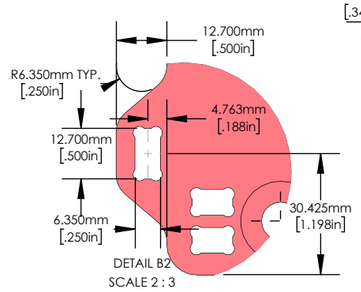

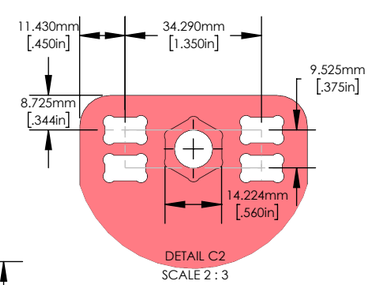

ATTENTION:
Left and Right Side Variation

ITEM NO.	PartNo	DESCRIPTION	QTY.
1	clamp-rod-cover	Battery Module Clamp Threaded Rod Cover Plate	4
2	compression-rod	Battery Module Clamp Compression Rod	2
3	3/8in-16 Thin Nut	316 Stainless Steel 0.375in - 16 Thread, Thin Nut	4
4	clamp-side-plate	Battery Module Clamp Side Plate	2
5	Btn. Screw 0.75inx0.25in-20	Button Head Screw 3/4in x 1/4-20 Thread	4

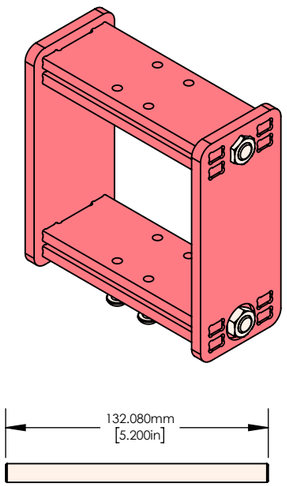

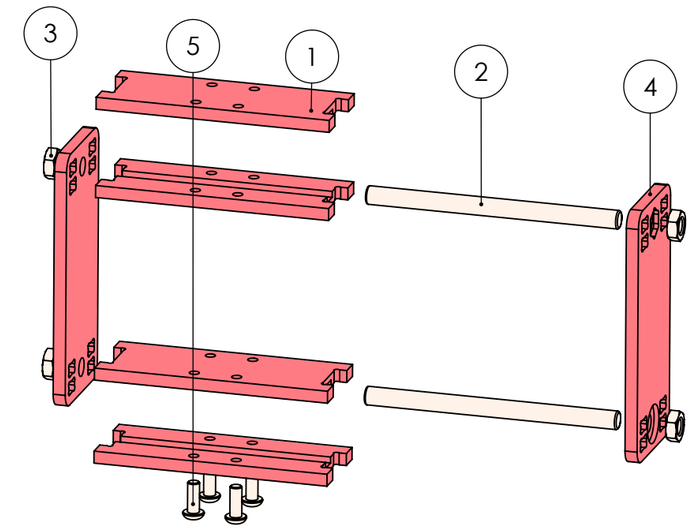

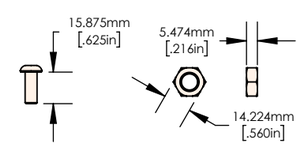

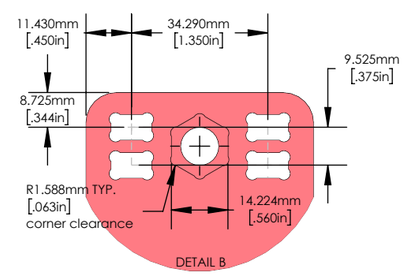

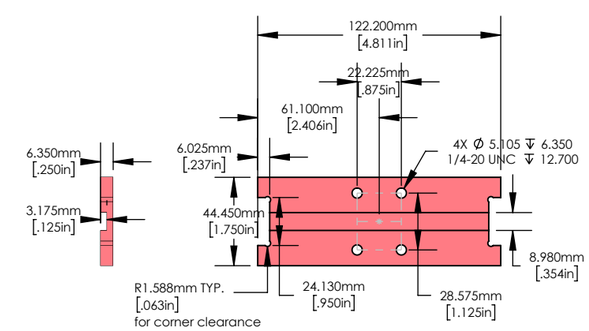

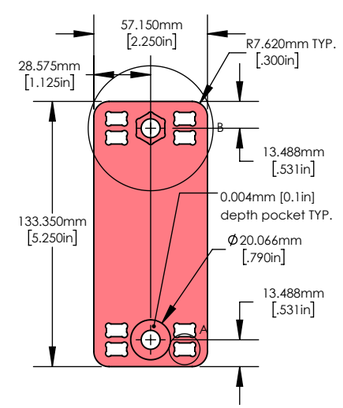

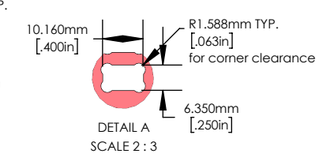

DO NOT SCALE DRAWING

REVISION

UNLESS OTHERWISE SPECIFIED:
DIMENSIONS ARE IN MILLIMETERS

RISING TIDE BOAT WORKS

TITLE:
Battery Module Clamp Assembly

MATERIAL:

WEIGHT:

DWG Filename.
clamp_asm

B

SCALE:1:3

SHEET 1 OF 1